1 In a transmission electron microscope, electrons from a heated filament are accelerated through a certain potential difference and then directed in a beam through a thin sample. The electrons scattered by the sample are focused by magnetic lenses onto a fluorescent screen where an image of the sample is formed, as shown in the figure below.

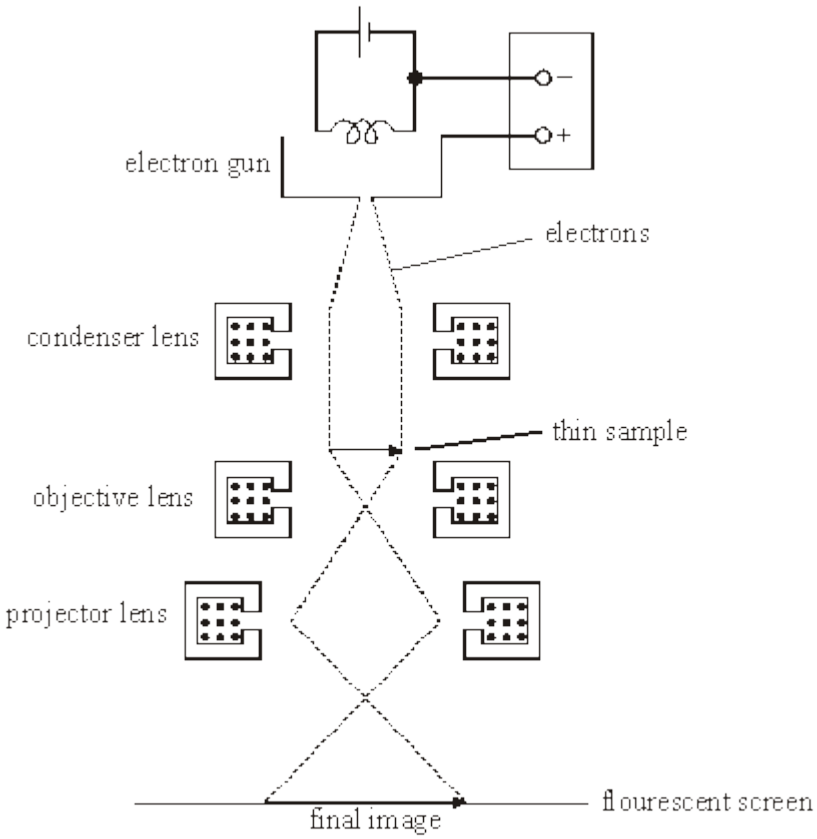

(a) State and explain **one** reason why it is important that the electrons in the beam have the same speed.

.....

.....

.....

.....

(2)

(b) When the potential difference is increased, a more detailed image is seen. Explain why this change happens.

.....

.....

.....

.....

.....

.....

(3)
(Total 5 marks)

2 An engineer uses copper cable to connect an intercom system between her office and workshop. The signals have to travel a long distance and she finds that interference (hum) from the mains supply is a problem.
She reduces the interference using a filter tuned to the frequency of the mains supply. The mains frequency is 50 Hz.

Figure 1 shows her solution which is based on a parallel *L*–*C* resonant circuit.

Figure 1

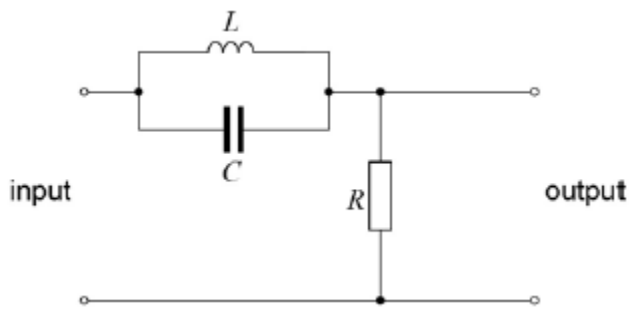

(a) The engineer uses a 2.0 H inductor.

Calculate the required value for C for the filter to operate at 50 Hz.

capacitance = ... F

(2)

Figure 2 is the response curve for the inductor-capacitor circuit which shows how the pd *V* across the inductor-capacitor circuit varies with frequency.

Figure 2

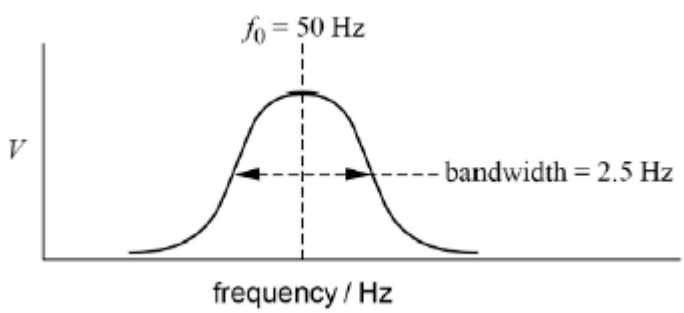

frequency / Hz

(b) Calculate, from the graph, the Q factor of the inductor-capacitor circuit.

Q factor = ...

(1)

(c) The inductor is replaced to one that has an inductance of 8.0 H and a lower resistance than that of the original inductor. The capacitor is not changed. Describe how this change affects the response curve of the inductor-capacitor circuit.

.....

.....

.....

.....

(2)
(Total 5 marks)

3 (a) State **two** characteristics of an operational amplifier.

.....

.....

(2)

(b) (i) Draw a circuit diagram showing an operational amplifier used as an inverting voltage amplifier.

(ii) Give suitable values for the components you have used in the circuit for a voltage amplification of magnitude 150.

.....

.....

.....

(4)

(c) When *negative feedback* is used with an amplifier the bandwidth increases.

(i) Explain what is meant by negative feedback as applied to the circuit drawn in part (b).

.....

.....

.....

(ii) Give **one** other advantage of using negative feedback in this application.

.....

(iii) State what is meant by the bandwidth of an amplifier.

.....

.....

(iv) Indicate on the graph below, by means of a horizontal line, the bandwidth of the amplifier whose characteristic is shown.

.....

.....

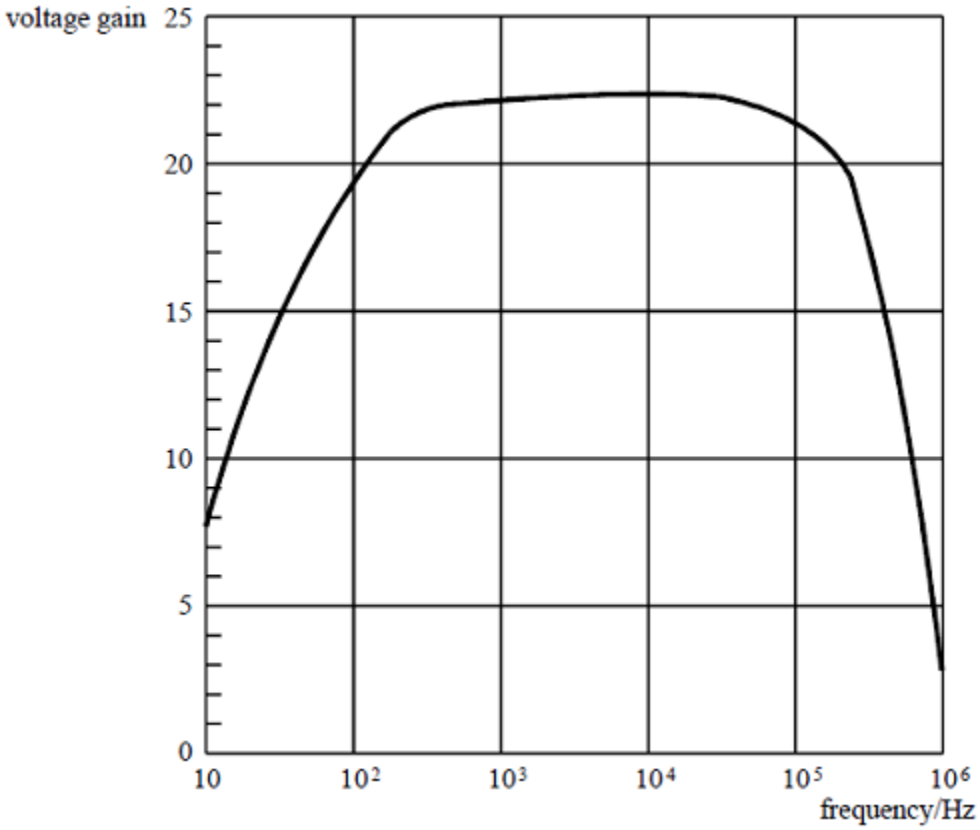

(5)
(Total 11 marks)

4 (a) (i) Without drawing circuit diagrams, explain the difference between *positive feedback* and *negative feedback*, in the case of an operational amplifier.

For each feedback, state how the gain of the amplifier is affected when compared with the open loop gain.

.....

.....

.....

.....

(ii) Give **two** advantages of using negative feedback in the case of an audio amplifier.

.....

.....

.....

(5)

(b) (i) Draw a circuit diagram of a non-inverting operational amplifier in which negative feedback is used. Label the input voltage and the output voltage. Do **not** show power supplies.

(ii) Suggest suitable values for the components used in the circuit so that a voltage gain of 12 is obtained.

.....

.....

.....

.....

(4)
(Total 9 marks)

5 A student designs a high power lamp system which flashes when the music reaches a certain sound level at a party. The system will automatically switch on when the volume of music received by a microphone, that gives only a low output voltage, exceeds a set level which can be adjusted. 5 Hz pulses generated in the system are then gated through to a driver which controls a lamp.

(a) Draw a system diagram as a possible plan for this system.

(8)

(b) In which subsystem(s) could

(i) an op-amp be used?

.....

.....

(2)

(ii) a potentiometer be used?

.....

(1)

(iii) a MOSFET be used?

.....

(1)
(Total 12 marks)

6 Stereo music recordings are made by having two separate microphones, one to the left and one to the right of the musicians. For these signals to be transmitted by radio they have to be processed so that a listener with a mono radio receives all of the information, while a listener with a stereo receiver can receive both the left and right channel signals separately.

(a) For the mono radio listener, the left and right signals are added together and transmitted normally.
Draw the circuit diagram for an op-amp circuit that can add together two audio signals.

(3)

(b) The magnitude of the voltage gain of the summing circuit is 1. On your diagram for part (a) mark suitable resistor values.

(2)

(c) So that the two separate channels can be obtained for the stereo listener, the left and right signals are subtracted from each other, and this information is also transmitted but in a way that cannot be heard by the mono listener.
Draw the circuit diagram for an op-amp circuit that can subtract one signal from the other.

(3)

(d) The magnitude of the voltage gain of the subtraction circuit is 1. Mark on your diagram in part (c) suitable resistor values.

(2)

(e) The stereo radio receives two signals, L+R and L– R. Explain how the left and right signals can be extracted from these combined signals.

.....

.....

.....

.....

(2)
(Total 12 marks)

7 In the circuit shown, an ideal operational amplifier is used as a voltage comparator.

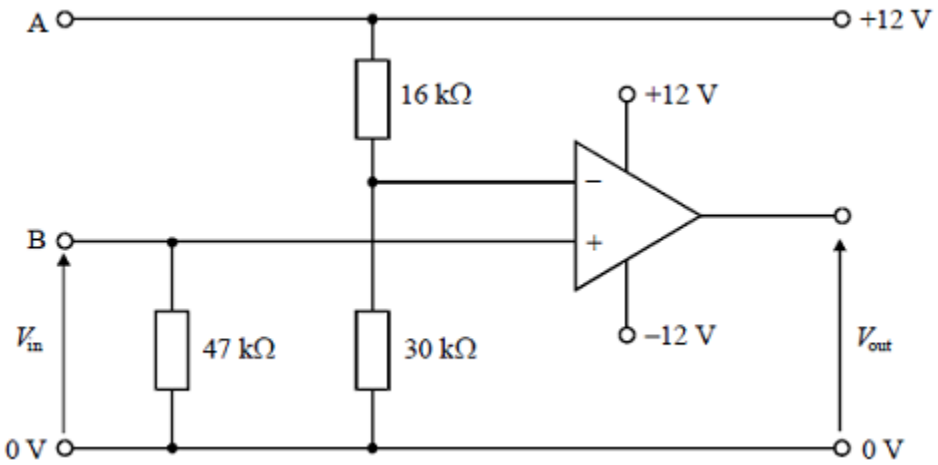

(a) The voltage V_{in} is steadily increased from 0 V. Calculate V_{in} when the sign of V_{out} changes from negative to positive.

.....

.....

.....

(2)

(b) (i) The op-amp is required to operate an LED. Add to the circuit an LED and its limiting resistor so that the LED lights when V_{in} is less than the value calculated in part (a).

(ii) Explain why the LED functions in the position you have drawn it.

.....

.....

(iii) Calculate the minimum value for the limiting resistor with the LED. Assume that the LED has a voltage drop of 2.0 V across it when emitting and a maximum current of 25 mA through it.

.....

.....

.....

(5)

(c) An LDR is now connected between the points A and B in the circuit. The characteristic of the LDR is shown below.

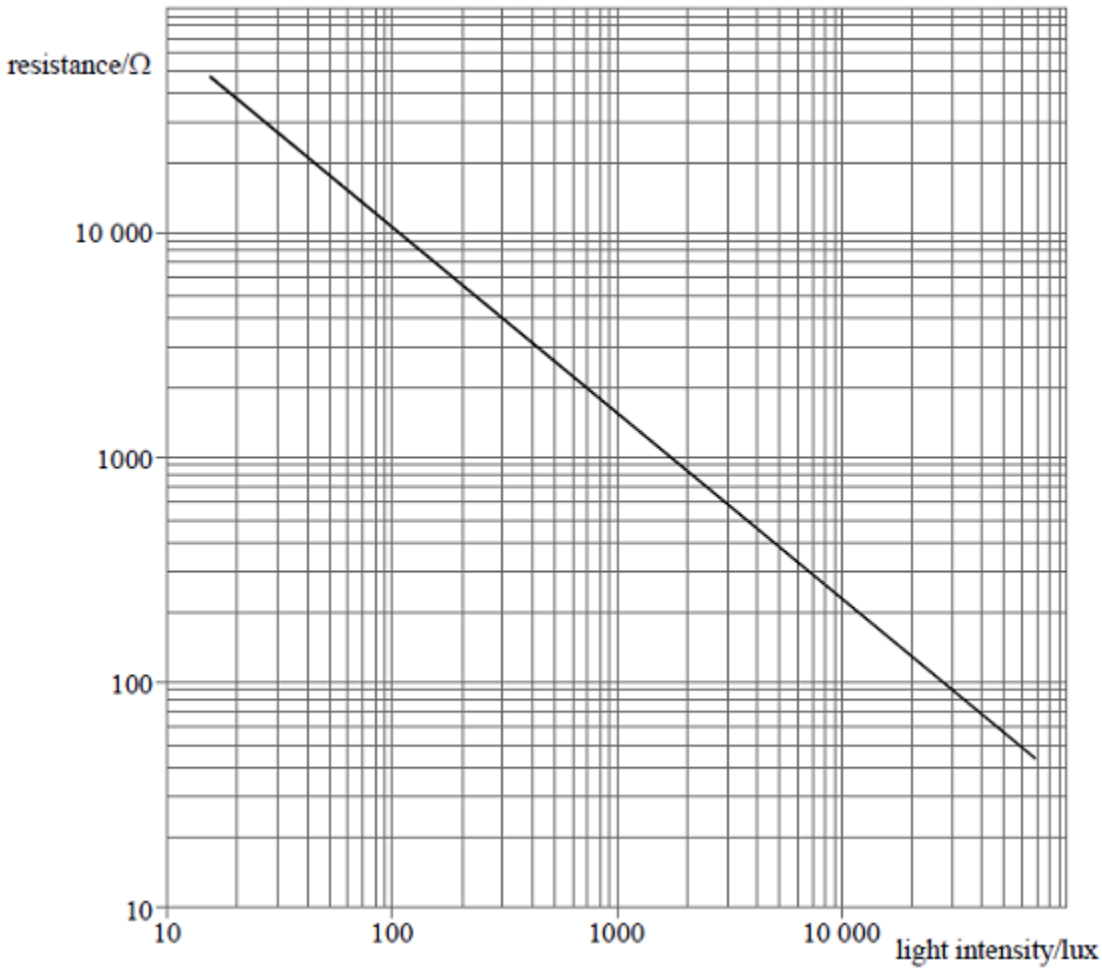

Determine the light intensity at which the LED switches.

.....

.....

.....

.....

.....

(3)
(Total 10 marks)

8 An LDR is being used as a light sensor in a system that will switch on a porch light when it gets dark.
The characteristic for the LDR is shown in **Figure 1**.

Figure 1

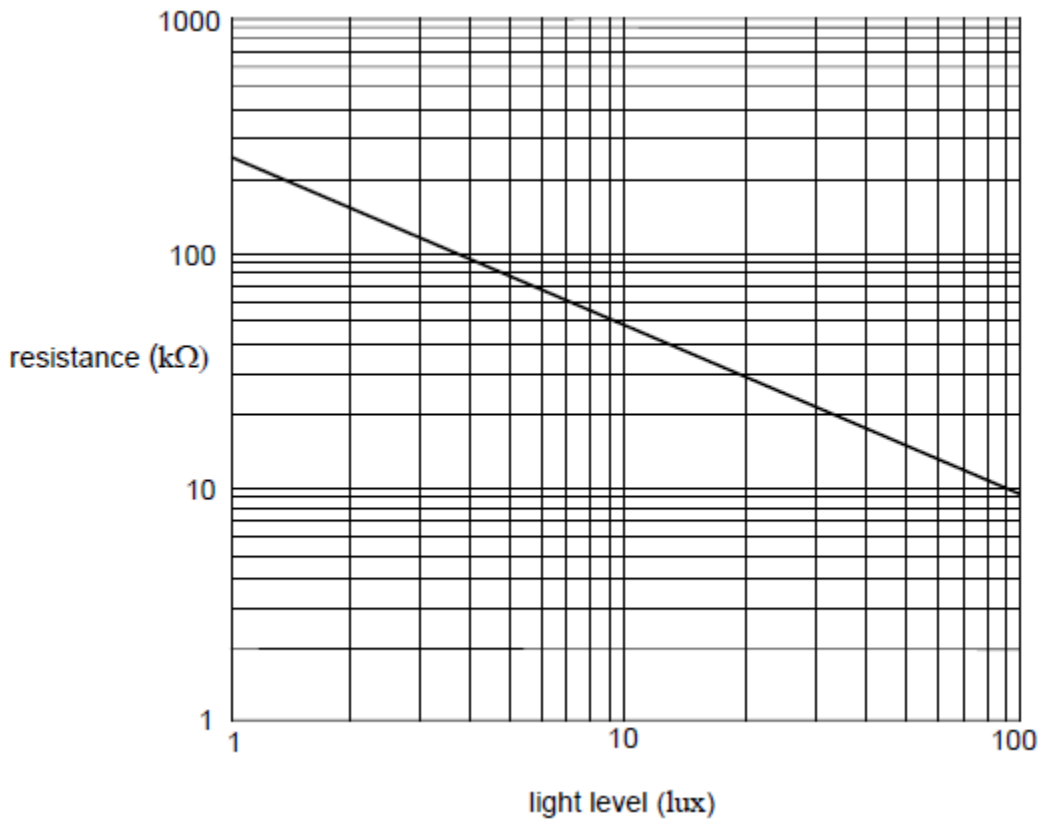

(a) (i) Explain how the use of the logarithmic scale in **Figure 1** is helpful when displaying this characteristic.

.....

.....

(1)

(ii) The LDR has a resistance of 60 kΩ when the light level causes the system to switch on the porch light.

State the value of this light level by reading from the graph in **Figure 1**.

light level..... lux

(1)

(b) **Figure 2** shows the circuit for detecting the light level.
The design makes use of an op-amp acting as a comparator.
A red LED acts as an output indicator to aid testing of the detector circuit.

Figure 2

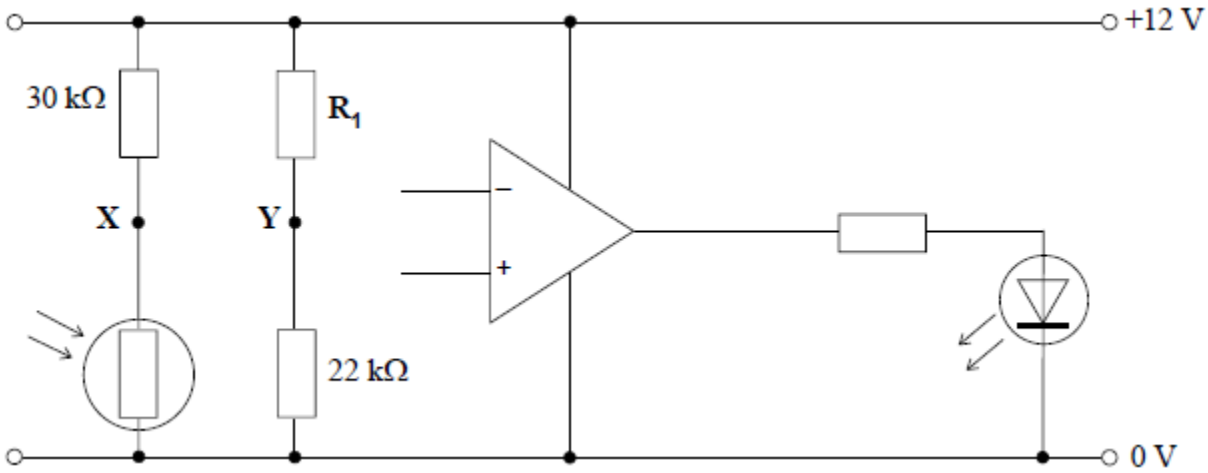

Draw on **Figure 2** the connections from points **X** and **Y** to the op-amp inputs so that the red LED switches on when the light level falls below the required value.

(1)

(c) (i) Calculate the voltage at point **X** when the red LED switches on.

.....

.....

.....

(2)

(ii) The reference voltage at **Y** is produced by two fixed-value resistors.

Calculate the value for resistor $\mathbf{R_1}$ in order to achieve the required circuit operation.

.....

.....

.....

(2)

(d) The red LED was found to stay on dimly even when the light level was well above the value expected to switch it off.

Explain why this might happen and how the problem could be solved.

.....

.....

.....

.....

.....

(3)
(Total 10 marks)

9 In order to reduce the bandwidth needed for transmission of an audio speech signal, the signal is filtered to remove high frequencies.

(a) Explain what is meant by the **bandwidth** of a signal.

.....

.....

.....

(2)

(b) Name the type of filter needed to remove high frequencies.

.....

(1)

(c) (i) Draw the circuit diagram of a passive filter to remove high frequencies, using a resistor and a capacitor.

Label the input and the output.

(2)

(ii) The resistor in the filter has a value of 1 kΩ.

Calculate the capacitor value required to give a breakpoint frequency of 4.0 kHz.

.....

.....

.....

.....

(3)

(d) The graph shows the response of a different filter to remove high frequencies.

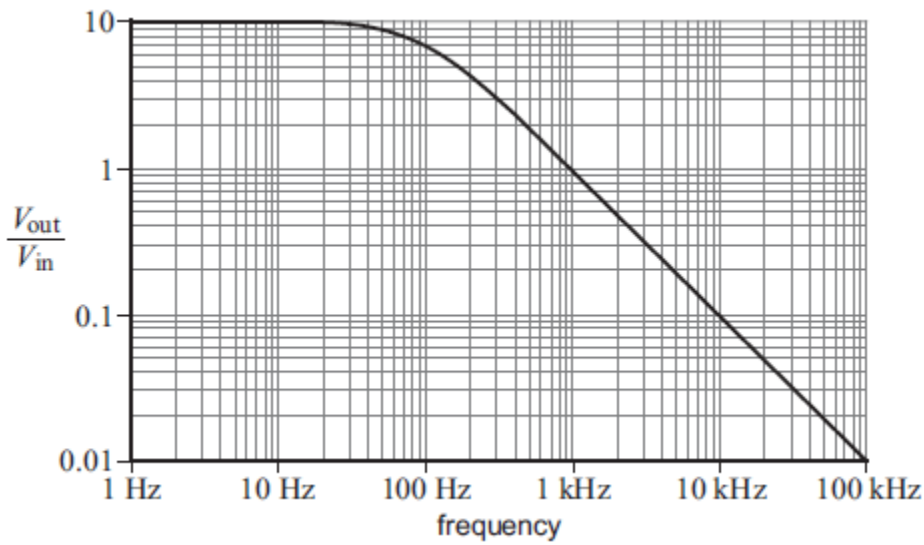

(i) State how the graph shows that this must be an **active** filter.

.....

(1)

(ii) Circle the value closest to the breakpoint frequency of this filter.

30 Hz 100 Hz 200 Hz 1 kHz

(1)

(iii) A 2 V, 5 kHz signal is applied to the input of this filter.

Calculate the output signal voltage.

.....

.....

(2)
(Total 12 marks)

10 (a) (i) An op-amp has two inputs. Label on the diagram the correct name for each input.

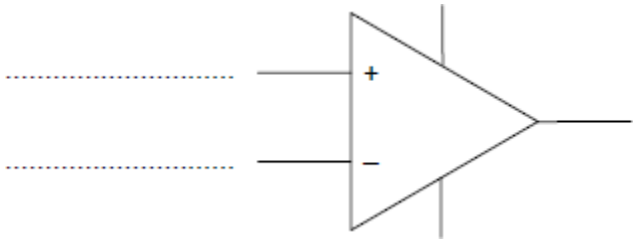

(2)

(ii) Explain how the op-amp works as a comparator, making reference to the two op-amp inputs.

.....

.....

.....

(2)

(b) The circuit shown below is a simple tester for 9V batteries. When the input voltage, V_{in}, is below 7 V, all the LEDs should be off. As the input voltage is increased the LEDs come on one at a time until they are all lit.

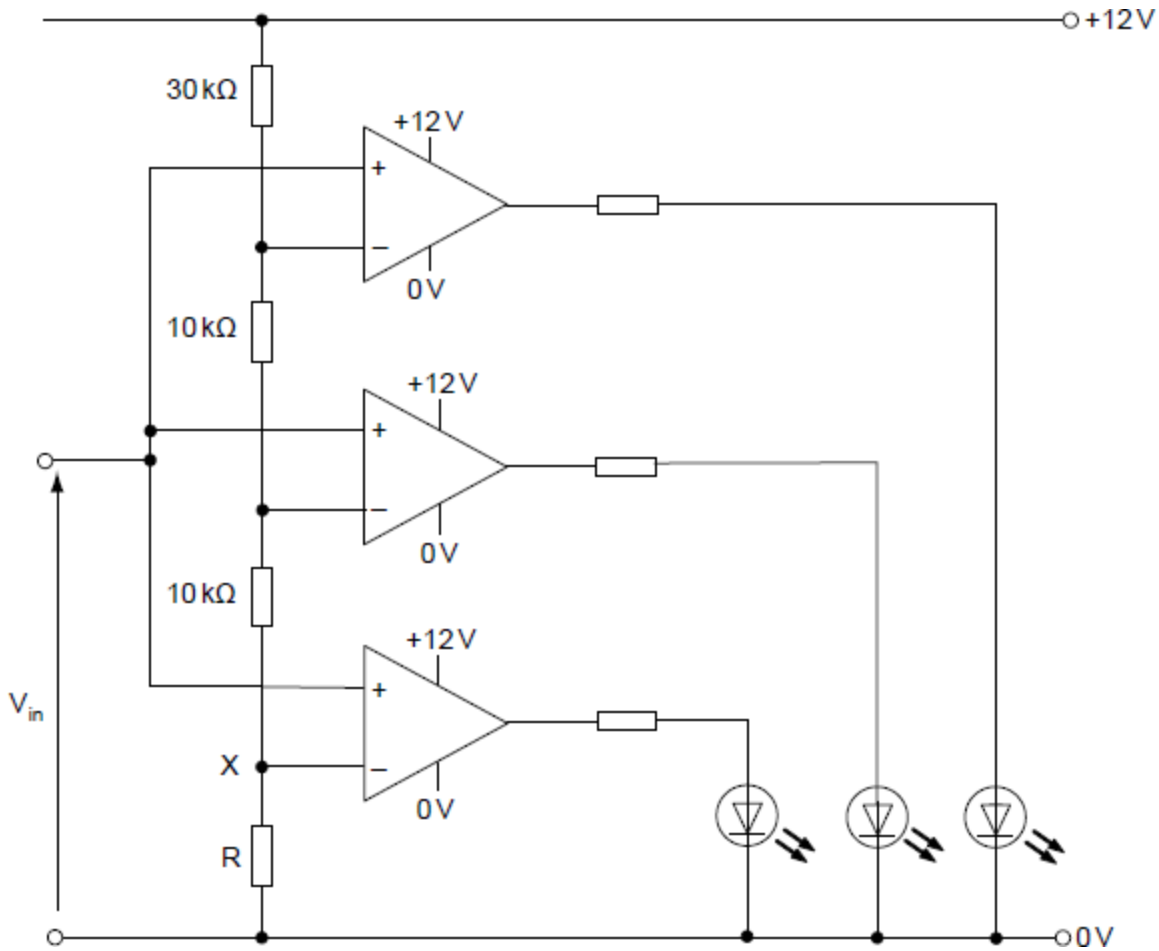

(i) Calculate the value of R to make the voltage at point X equal to 7 V.

.....

.....

(2)

(ii) Calculate the minimum input voltage, V_{in}, at which all LEDs are lit.

.....

.....

.....

(2)

(c) The circuit is built using red LEDs. When this circuit was tested with the input voltage below 7 V, all LEDs should have been off but remained on dimly. Explain why replacing the red LEDs with blue LEDs solved this problem.

.....

.....

.....

(2)
(Total 10 marks)

11 A circuit is required to amplify the output voltage from a microphone by a factor of 100. The input resistance of the amplifier must be 4.7 kΩ to match the internal resistance of the microphone.

(a) In the space below, complete the circuit diagram of a suitable op-amp amplifier and give suitable resistor values to match the specification. The circuit can be inverting or non-inverting.

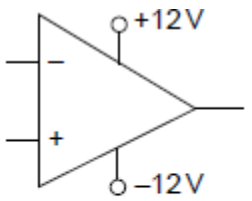

(4)

(b) The op-amp is powered by a ±12 V supply. Assuming an ideal op-amp is used, calculate the maximum amplitude of the input signal before the output becomes saturated.

.....

.....

(2)

(c) The op-amp has a gain-bandwidth product of 1 MHz. Draw on the graph below how the open loop voltage gain of the op-amp varies with frequency.

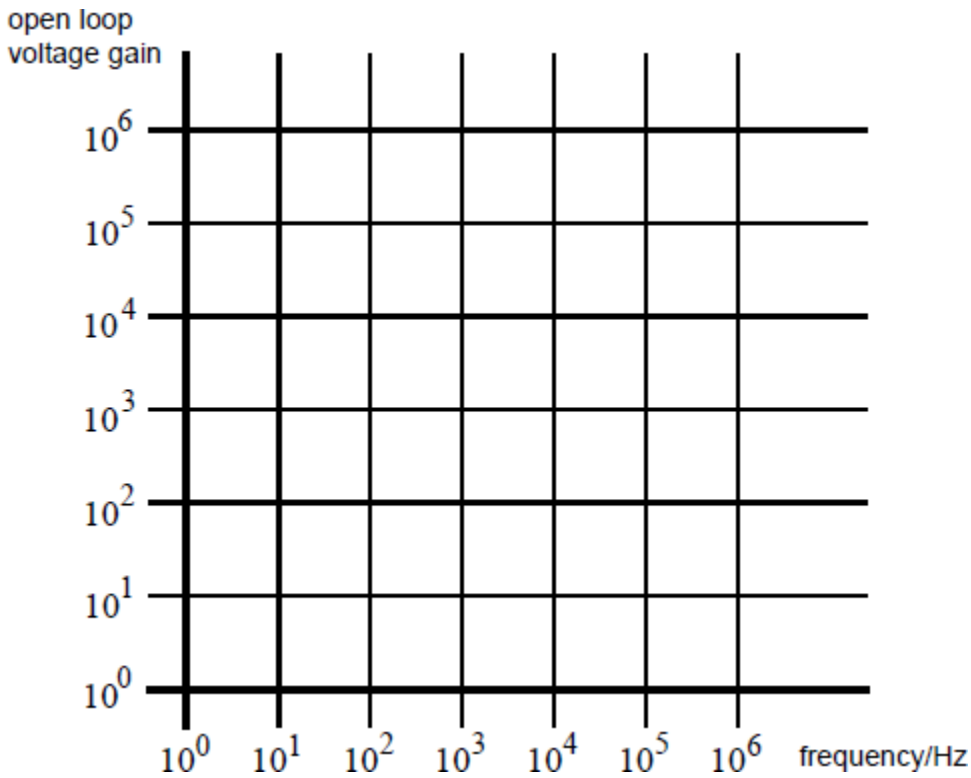

(3)

(d) Calculate the frequency above which the voltage gain of the amplifier is less than 100.

.....

.....

(2)
(Total 11 marks)

12 (a) Complete the circuit diagram below for a difference amplifier with a voltage gain of 100. Label the inputs and output.

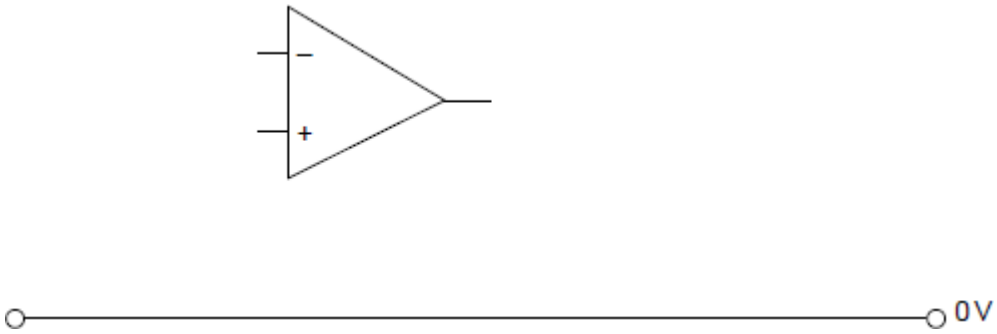

(6)

(b) The difference amplifier is used with strain gauge sensors to measure the strain on a metal girder in a bridge.

A strain gauge sensor consists of very fine wires enclosed in a plastic case, as shown below. When the sensor is stretched its resistance increases and when compressed its resistance decreases. The changes in resistance are very small.

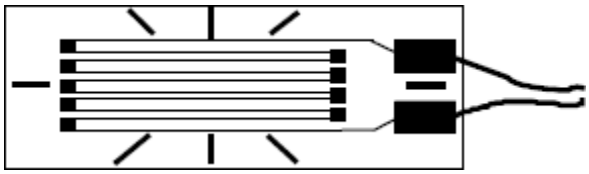

Two strain gauge sensors are glued to the girder, one to the top and one to the bottom, as shown below.

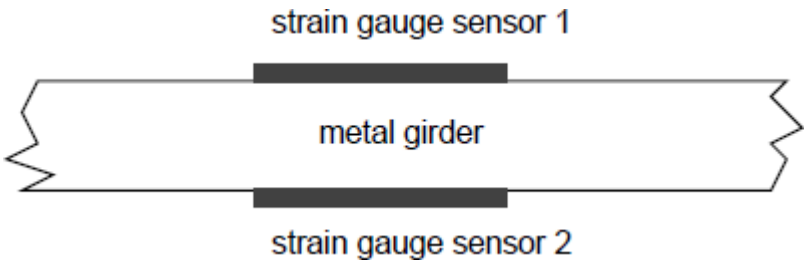

When the girder bends, the resistance of sensor 1 decreases and the resistance of sensor 2 increases.
The sensors are connected to the circuit shown below.

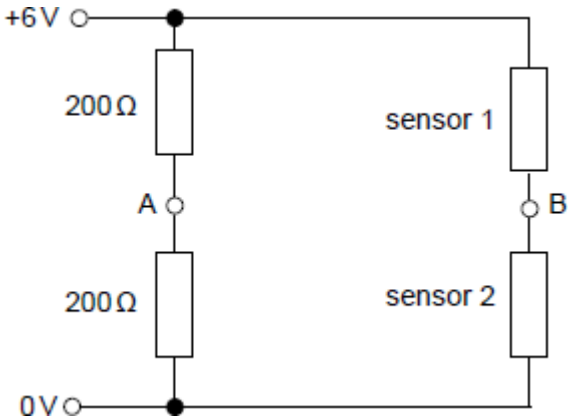

(i) What is the voltage at point A?

.....

.....

(1)

(ii) If sensor 1 and sensor 2 are both unstrained and each has a resistance of 200 Ω, what will be the difference in voltage between points A and B?

.....

(1)

(c) The inputs to the difference amplifier in part (a) are connected to points A and B. When the metal girder bends a small amount, the resistance of sensor 1 decreases by 1% and that of sensor 2 increases by 1%.

Estimate, showing your calculation, the output voltage of the difference amplifier under these conditions.

.....

.....

.....

.....

.....

(3)
(Total 11 marks)

13 A student finds that there is too much high frequency noise (hiss) on the audio frequency signal from a radio receiver he has constructed.

(a) What type of filter is required to pass the wanted signal and reduce the noise?

.....

(1)

(b) Draw the circuit diagram of a passive filter that would improve the quality of the signal. Label the input and the output.

(4)

(c) The components he chooses have values of 10 kΩ and 10 nF.
Calculate the breakpoint frequency of this filter.

.....

.....

.....

(3)

(d) State with a reason whether this would be suitable for a full range audio frequency signal.

.....

.....

(2)
(Total 10 marks)

14 Modern UK passports contain a Radio Frequency Identification Device (RFID) chip connected to a coil of wire.

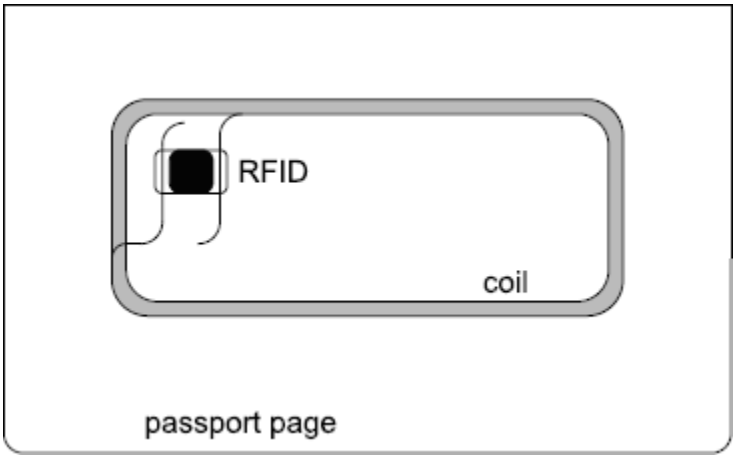

(a) The RFID chip operates at a frequency of 13.56 MHz. The RFID chip has an effective capacitance of 20 pF in parallel with the coil.
Calculate the required inductance of the coil.

.....

.....

.....

.....

.....

(4)

(b) Calculate the length of a half wave dipole aerial for this frequency. Explain why a coil of wire is used at the immigration control desk for reading the data on the RFID instead.

.....

.....

.....

.....

(3)

(c) The quality factor, Q, of a tuned circuit is $\frac{f}{\Delta f}$.

If the bandwidth, Δf, of the tuned circuit in a passport is 100 kHz, calculate the quality factor of the tuned circuit.

.....

(1)

(d) Assume the bandwidth given in part (c) represents the highest bit rate that can be used to transfer data from the RFID. Estimate, using a calculation, the length of time it would take to read 1 KB of data.

.....

.....

.....

(2)
(Total 10 marks)

15 The TDA2030 is an audio power IC amplifier which operates from a maximum supply voltage of ±18 V. The pin connections and a simplified application circuit have been found in the data sheet shown below.

TDA2030 DATA SHEET

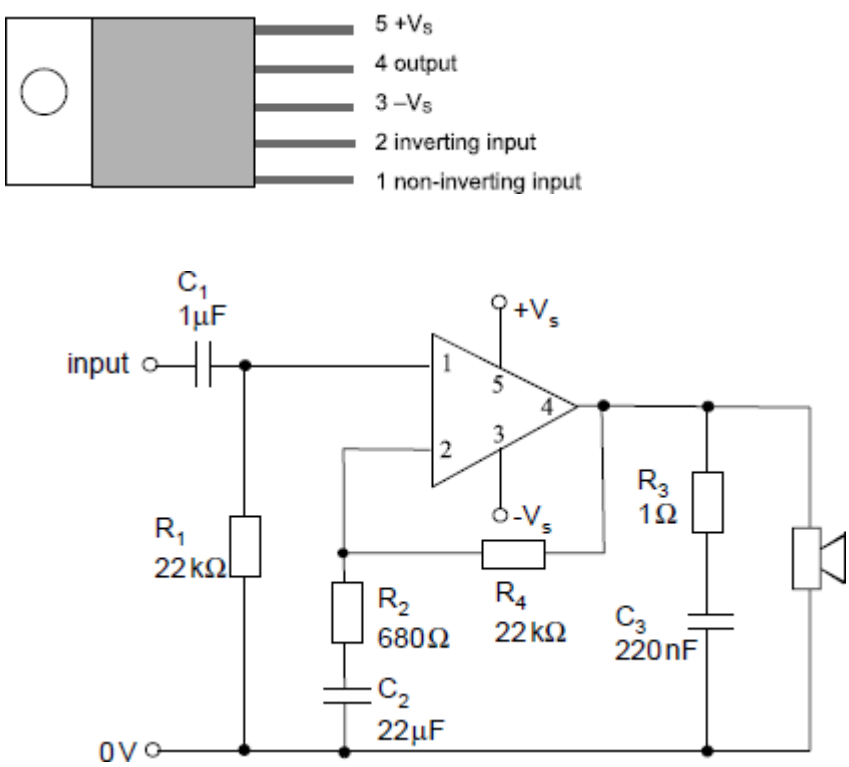

(a) State whether the amplifier is connected in inverting or non-inverting configuration. Explain your answer.

.....

.....

.....

(2)

(b) C_1 and R_1 form a filter for the input signal.

(i) State the type of filter formed by C_1 and R_1.

.....

(1)

(ii) Calculate the breakpoint frequency of this filter.

.....

.....

.....

.....

(3)

(c) What is the effect of the inclusion of R_3 and C_3 in this circuit?

.....

(1)

(d) State which of the components you could alter to change the overall gain of the system. Explain your answer.

.....

.....

.....

.....

(2)

(e) State **two** factors which limit the output power that can be obtained from a circuit made using this IC.

.....

.....

(2)
(Total 11 marks)

16 A system to detect when the temperature in a room exceeds 20°C is needed as part of an energy saving scheme. Part of the system is shown below.

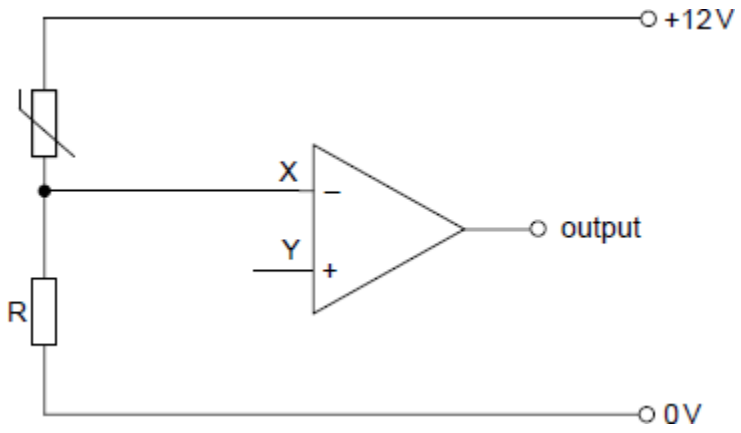

On the diagram above name and label the device used as a

(a) (i) temperature sensor

(1)

(ii) comparator.

The comparator input Y requires a reference voltage of 4 V.

(1)

(b) (i) Draw **two** components and their connections to the circuit to show how this is achieved.

(2)

(ii) Select suitable values for these components and mark these on the circuit diagram next to each component.

(1)

(c) The temperature sensor data sheet gives the following graph.

Calculate the value of R that would make the comparator switch at 20°C.

.....

.....

(3)

(d) Give the output voltage from this circuit when the voltage at X is greater than the voltage at Y

(i) for an ideal comparator .....

(1)

(ii) for a real comparator .....

(1)

(Total 10 marks)

17 (a) The demodulator stage in a radio receiver has an output voltage of 10 mV but can only deliver a very small current. This stage is then connected to an af amplifier.

(i) Explain why the af amplifier should have a high input resistance.

.....

.....

.....

(1)

(ii) What type of op-amp based circuit should be used for the af amplifier?

.....

(1)

(iii) The voltage gain of the af amplifier is to be 28.
Draw a suitable circuit in the space below.
Choose and calculate suitable values for the resistors.
Label these components with their correct values on your diagram and label the input and output connections to the circuit.

(5)

(iv) Calculate, using data given earlier in this question the output signal voltage from this circuit.

.....

(2)

(b) The op-amp IC used has a gain-bandwidth product of 1 MHz.
Calculate the bandwidth of this af circuit and comment on its suitability for this application.

.....

.....

.....

.....

.....

(3)

(c) The amplified audio signal is then fed to a push-pull output stage using two MOSFETs. Draw a suitable circuit in the space below, label the p-channel and n-channel MOSFETs.

(4)
(Total 16 marks)

18 (a) A radio transmitter system consists of the four subsystems.

Label the diagram below with the names of each subsystem.

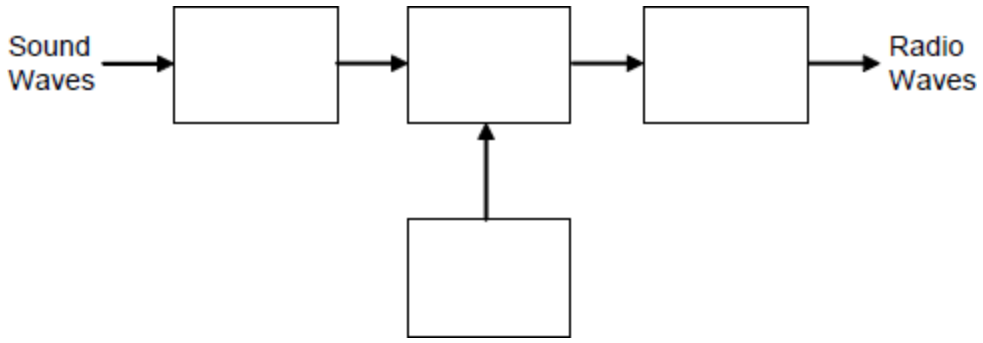

(4)

(b) (i) Which **one** of the subsystems above produces an unmodulated rf signal and may contain a tuned circuit?

.....

(1)

(ii) The tuned circuit contains a 5 pF capacitor and a 0.1 μH inductor. Calculate the frequency of the signal that the subsystem produces.

.....

.....

.....

(3)

(c) A DAB transmitter has a frequency of 227.36 MHz. Calculate the length of a half-wave dipole that would be suitable for use as an aerial for this transmitter.

.....

.....

.....

(2)
(Total 10 marks)

19 A student designs an electronic system to control a ventilation fan for a greenhouse. The fan should be switched on only when both the temperature and humidity exceed certain levels that can each be set independently.

(a) Choosing appropriate input, process and output subsystems from the list below, draw a labelled block diagram to show a possible design for the system.

Choose from:

AND gate	**comparator**	**driver**	**humidity sensor**
fan motor	**temperature sensor**	**voltage divider**	

(7)

(b) In which subsystem would:

(i) a MOSFET be used .....

(1)

(ii) an op-amp be used .....

(1)

(iii) a thermistor be used? .....

(1)

(c) The controller circuit operates from a 12 V power supply and draws a current of 25 mA under all conditions.
The fan motor requires a current of 450 mA when switched on and operates from the same 12 V power supply.

Calculate:

(i) the total current drawn by the whole system when the fan motor is switched on

.....

(1)

(ii) the input power to the whole system when the fan motor is switched on.

.....

(2)
(Total 13 marks)

20 A student reads in a medical physics book that the electrocardial potential difference across a typical person's chest has a peak value of 2 mV. She wishes to record this on her computer, which requires a peak input signal of 1 V and decides to build a difference amplifier.

(a) Calculate the voltage gain required from the difference amplifier.

.....

.....

(3)

(b) Complete the circuit diagram below for the difference amplifier by adding **two** resistors.

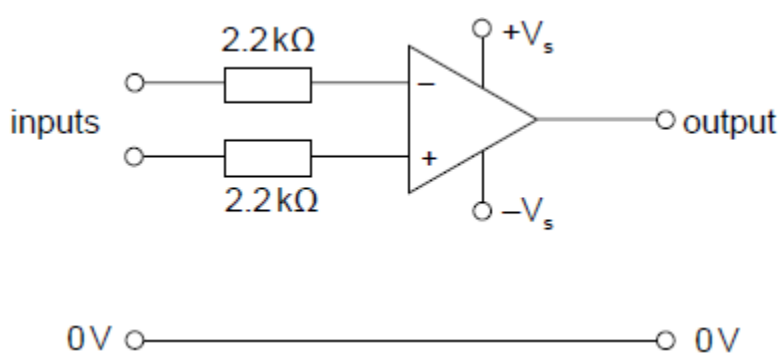

(4)

(c) Calculate a suitable value for the resistors in part (b).

.....

.....

.....

(3)

In practice, the results were very disappointing. Her teacher suggested that it was because the input resistance of the difference amplifier was too low and that each input should be buffered by an op-amp voltage follower.

(d) (i) State the approximate input resistance of the difference amplifier inputs.

.....

(1)

(ii) Draw the circuit diagram of an op-amp voltage follower.

(2)
(Total 13 marks)

21 Radio frequency identification (RFID) is a system now widely used as an alternative to barcodes. A typical application is in the anti-theft tags used on shop goods.

The aerial in the transceiver transmits a signal which activates the tag. The tag then transmits data to the transceiver. The frequency of the signals is typically 13.56 MHz. The transceiver's aerial is made of a coil of wire, which also acts as the inductor for the tuned circuit.

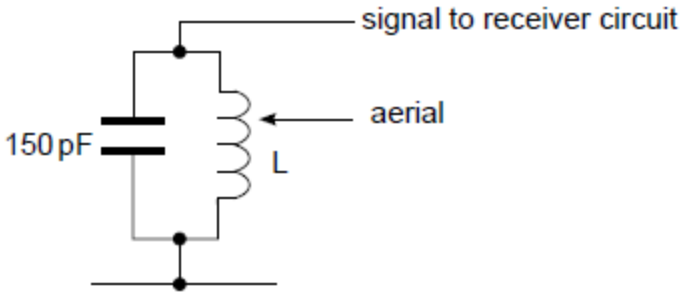

(a) Show that a suitable value for the inductor, L, is approximately 920 nH.

.....

.....

(2)

(b) On the graph below sketch what you would expect the frequency response curve for the tuned circuit to look like.

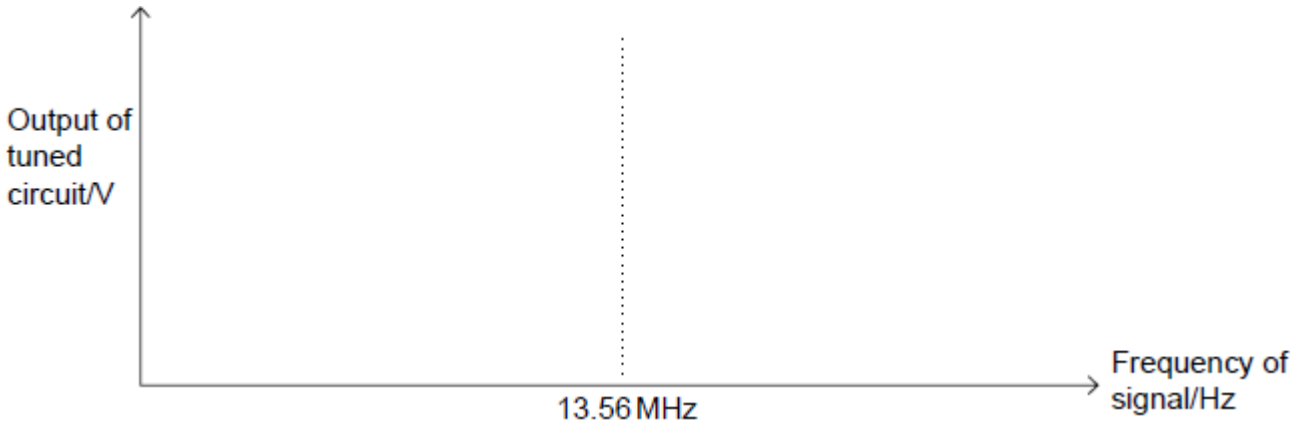

(2)

(c) It is important for reliable operation that the RFID system has high *selectivity*. This can be achieved if the tuned circuit has a high *quality factor (Q)*. With reference to your graph, explain what these terms mean.

selectivity .....

.....

quality factor.....

.....

(2)
(Total 6 marks)

22 The circuit shown in **Figure 1** uses an ideal op-amp as a voltage comparator. It is used in a frost warning device in which the LED lights when the temperature falls to 0°C.
Figure 2 shows the variation of resistance with temperature of the thermistor.

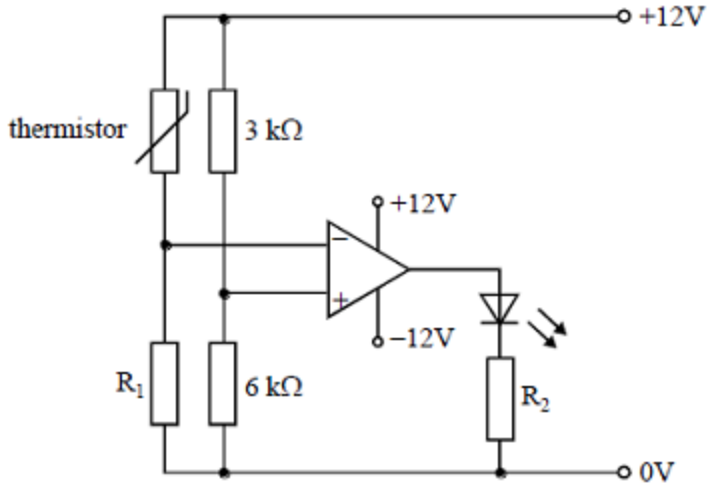

Figure 1

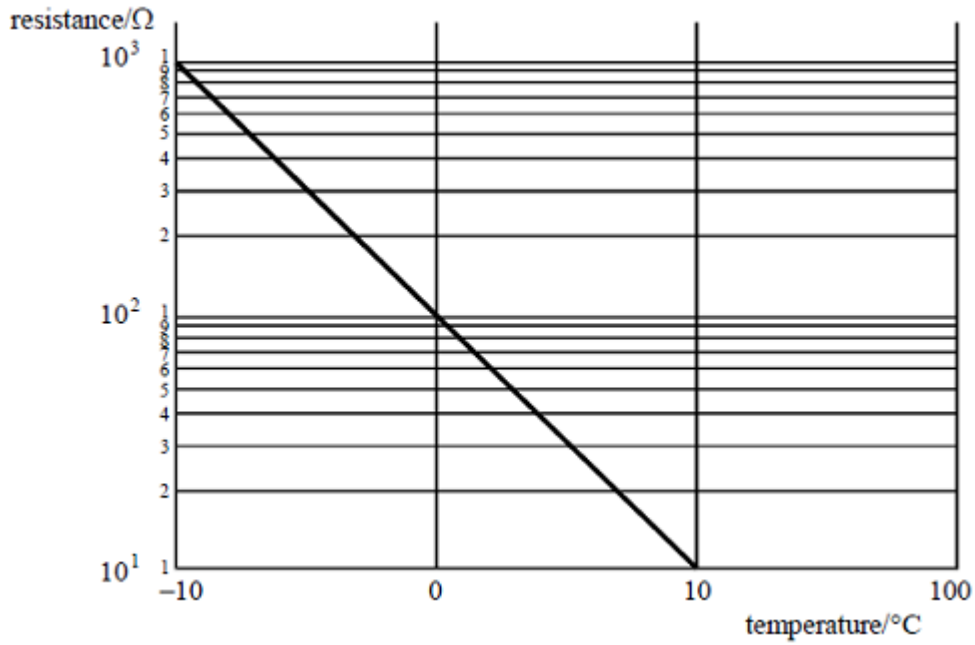

Figure 2

(a) Calculate the voltage at the non-inverting input of the op-amp.

.....

.....

.....

.....

(1)

(b) Calculate the resistance of R_1 to allow the output to switch at 0°C.

.....

.....

.....

.....

(2)

(c) When the LED is on, the current through it is 20 mA and the p.d. across it is 2.0 V.

Calculate

(i) the resistance of resistor R_2,

.....

.....

(ii) the power dissipated in this resistor.

.....

.....

(4)

(d) In practice, what value of resistor from the E24 series should be used for R_2?

.....

(1)
(Total 8 marks)

23 The figure shows the circuit of a high-pass filter. The ac source has a variable frequency.

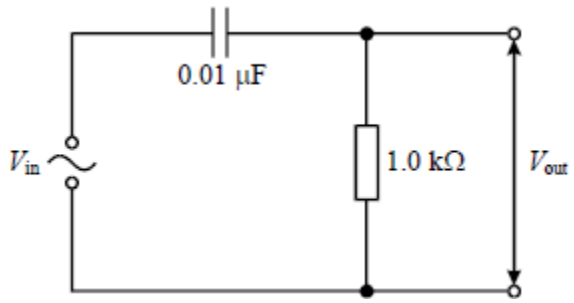

(a) (i) Calculate the frequency at which the reactance of the capacitor is 1.0×10^3 Ω.

.....

.....

.....

(ii) Explain why $\frac{V_{out}}{V_{in}}$ will have a low value at low frequencies.

.....

.....

.....

.....

.....

(4)

(b) The variation of $\frac{V_{out}}{V_{in}}$ with frequency for the high-pass filter is shown below.

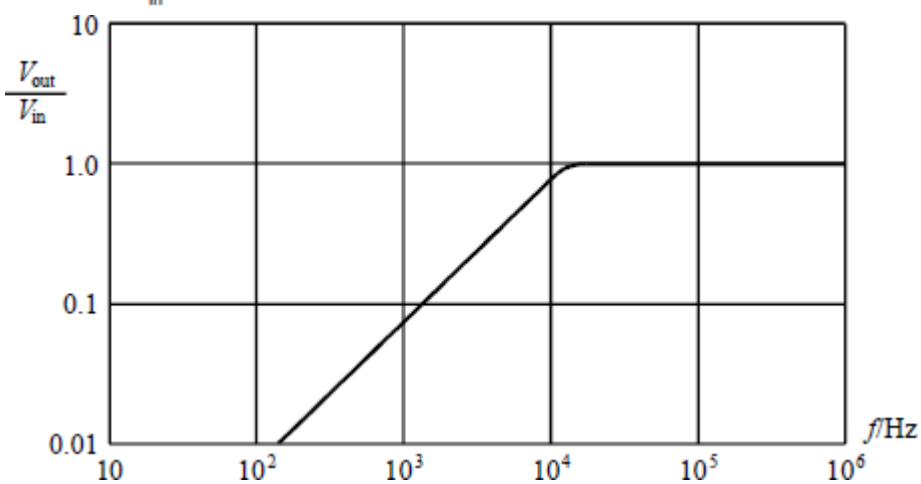

Explain, without further calculation, the form of the characteristic.

.....

.....

.....

.....

(2)
(Total 6 marks)

24

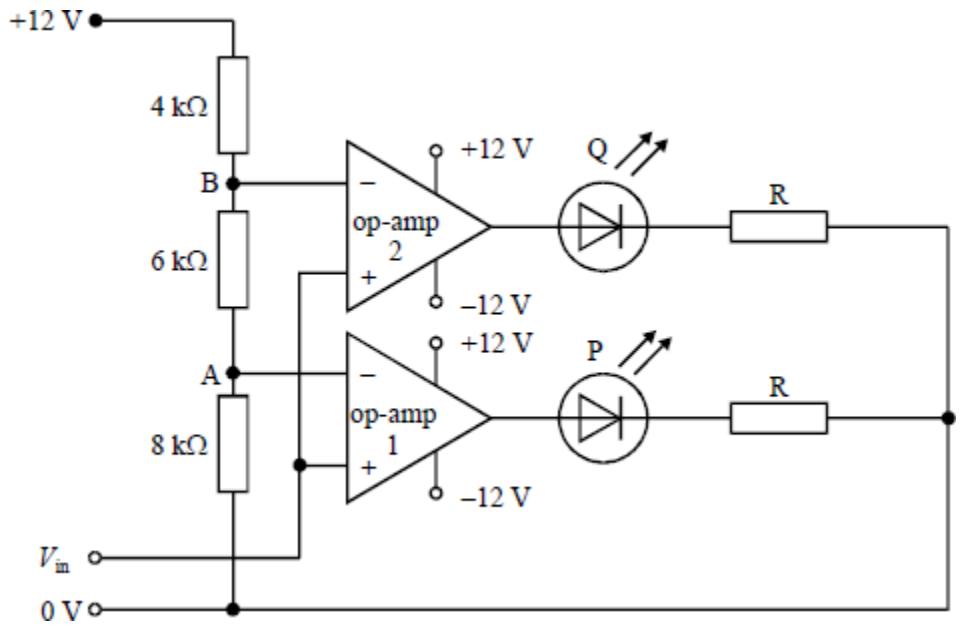

(a) For the circuit shown calculate the voltage

(i) at the point A,

.....

.....

(ii) at the point B.

.....

.....

(3)

(b) Describe, with a reason in each case, the state of each LED when V_{in} = 6.5 V.

(i) LED P .....

.....

.....

(ii) LED Q .....

.....

.....

(4)

(c) Determine the resistance of R needed to limit the current through either LED to 20 mA. Assume that the forward voltage drop across either LED is 16.V

.....

.....

.....

(2)
(Total 9 marks)

25 In this voltage comparator circuit the LED lights up only when the illumination falling on the LDR in the resistor network lies between two particular values.

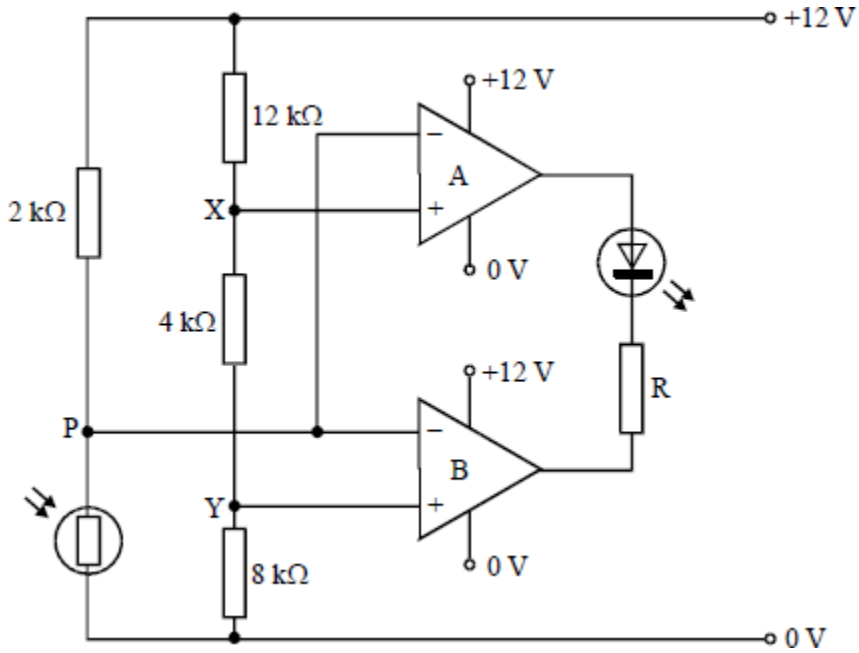

The LDR has the characteristic shown below.

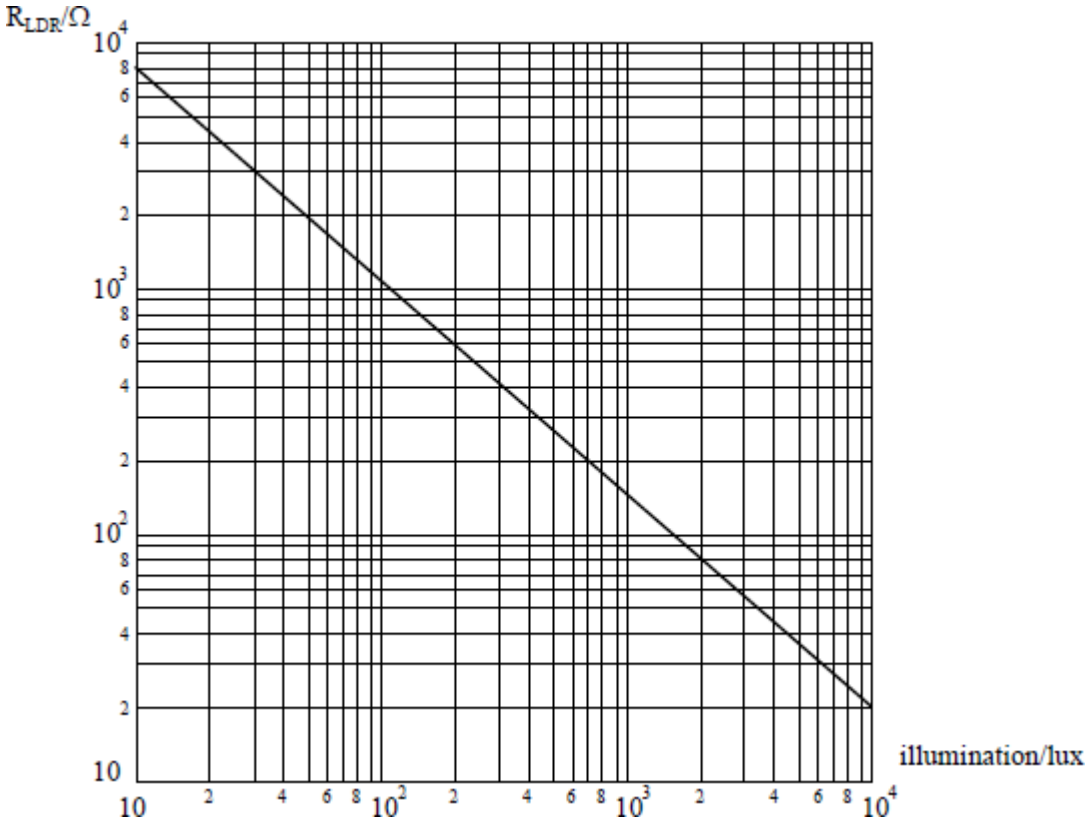

(a) Give the voltage output values of the operational amplifiers which make a current flow through the LED so that it lights up.

.....

(1)

(b) Calculate the voltages at points X and Y in the resistor chain.

.....

.....

.....

(2)

(c) Use the answers to part (b) to determine the two values of the illumination between which the LED will be lit.

.....

.....

.....

.....

(4)

(d) Explain how the circuit works, making appropriate reference to your calculations in parts (b) and (c).

.....

.....

.....

.....

(4)
(Total 11 marks)

26 A temperature sensor input subsystem is shown below.

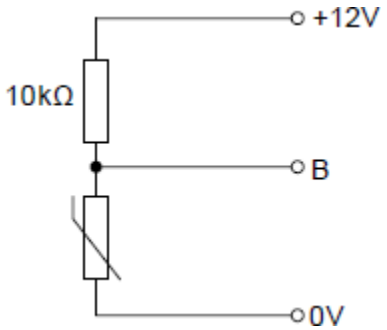

(a) The thermistor shown above has a resistance of 45 kΩ at 0 °C, 20 kΩ at 25 °C, and 1 kΩ at 100 °C.
Calculate the output voltage at B at a temperature of 25 °C.

.....

.....

(3)

(b) The temperature sensor input subsystem is connected to the comparator circuit as shown below.

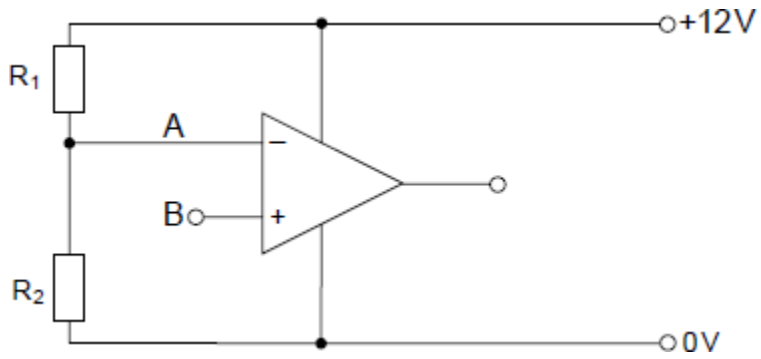

Calculate and choose values of resistors, in the 1 kΩ to 10 kΩ range, for the circuit that will make the comparator switch at 25 °C. Label these on the diagram.

.....

.....

(3)

(c) What voltage would you expect from the output of this circuit when:

(i) the temperature is 20 °C .....

(1)

(ii) the temperature rises to 30 °C? .....

(1)
(Total 8 marks)

Mark schemes

1 (a) force on an electron in a magnetic field depends on speed **(1)**
electrons at different speeds would be focussed differently so image would be blurred **(1)**
[or electrons at different speeds would have different (de Broglie) wavelengths
therefore resolution would be reduced]

2

(b) increase in pd increases speed **(1)**
increase in speed/momentum/E_k causes reduction of (de Broglie) wavelength **(1)**
reduced (de Broglie) wavelength gives better resolution **(1)**

3

[5]

2 (a) $f_0 = 1 / (2\pi \times \sqrt{(L \times C)})$ $C = 1 / (f_0^2 \times 4\pi^2 \times L)$ ✓ [valid rearrangement]
$= 1 / (50^2 \times 4\pi^2 \times 0.1)$
= 5.07 (5.1) μF ✓ [μF]

2

(b) Q factor = f_0 / f_B = 50 / 2.5 = 20 ✓

1

(c) Resonant frequency becomes 25 Hz ✓

Peak higher than original at resonant frequency ✓✓

2

[5]

3 (a) high input impedance
very large voltage gain any two **(1) (1)**
low output impedance

2

(b) (i) circuit diagram to show: correct feedback and output **(1)**
correct inputs **(1)**

(ii) $R_a \geq 1$ kΩ **(1)**
gives R_f = 150 kΩ **(1)**

4

(c) (i) fraction of output fed back through R_f **(1)**
is 180° out of phase with input **(1)**

(ii) increased stability or less distortion or controlled gain **(1)**

(iii) range of frequencies within which voltage gain
does not fall by 1 / √2 or power by 1 / 2 **(1)**

(iv) bandwidth given by gain of $\frac{22}{\sqrt{2}}$ = 16 **(1)** (15.6)

horizontal line at gain = 16 and inside curve

max 5

[11]

4 (a) (i) *positive feedback:*
part [or all] of output fed back in phase with input **(1)**

negative feedback:
part [or all] of output fed back 180° out of phase with input **(1)**
positive feedback – gain increased*
negative feedback – gain decreased*
* **(1)**

(ii) voltage gain more predictable [or constant]*
distortion or noise reduced*
bandwidth increased*
* any two **(1) (1)**

(5)

(b) (i)

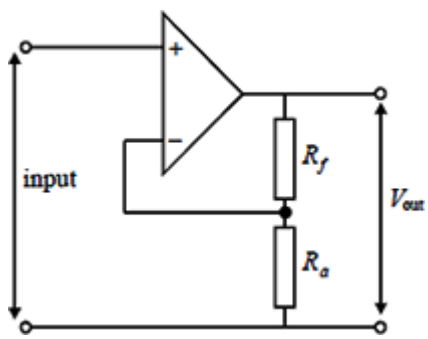

potential divider between outputs **(1)**
correct inputs **(1)**

(ii) $R_a \geq 1\ k\Omega$ **(1)**

using gain = $1 + \frac{R_f}{R_a}$ gives R_f = 11 kΩ **(1)**

[or value consistent with R_a]

(4)

[9]

5 (a)

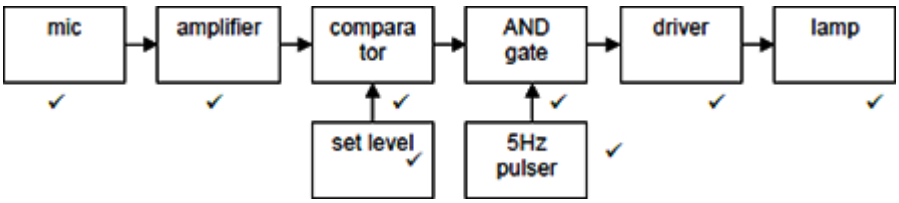

8

(b) (i) amplifier ✓ comparator ✓

2

(ii) set level✓

1

(iii) driver✓

1

[12]

6 (a) Two input resistors to the inverting input ✓,
feedback resistor to the inverting input from the output ✓,
non-inverting input to 0V ✓

3

(b) All resistors the same value ✓,
1kΩ<R<4MΩ ✓

2

(c) Two input resistors, one to each op-amp input ✓,
feedback resistor to the inverting input from the output ✓,
resistor from non-inverting input to 0V ✓

3

(d) All resistors the same value ✓,
1kΩ<R<4MΩ ✓

2

(e) (L + R) + (L - R) = 2L ✓,
(L + R) - (L - R) = 2R ✓
or equivalent by diagram or description

2

[12]

7

(a) $V_{-} = 12 \times \frac{30}{46}$ **(1)**

$= 7.8$ V **(1)**

2

(b) (i) between V_{out} and 0 V **(1)**
(or from +12 V to V_{out})
correct direction and resistor **(1)**

(ii) (since V_{in} < switching voltage) V_{out} = – 12 V (12 V across LED) **(1)**
(or alternative)

(iii) voltage across R = (12 - 2) = 10 (V) **(1)**
10 = 25 × 10^{-3} × R gives R = 400 Ω **(1)**
(or alternatively 22 = 25 × 10^{-3} to give R = 880 Ω)

5

(c) to switch LED voltage at B = 7.8 (V) **(1)**

R_{LDR} given by $7.8 = \frac{12 \times 47}{47 + R}$ or

R_{LDR} = 25.(3) kΩ
light level = 30 lux **(1)**

max 3

[10]

8

(a) (i) Log graph enables a wide range of values to be displayed on the same axis.

Allow − (enables values to be displayed as straight line)

1

(ii) 7 lux

1

(b)

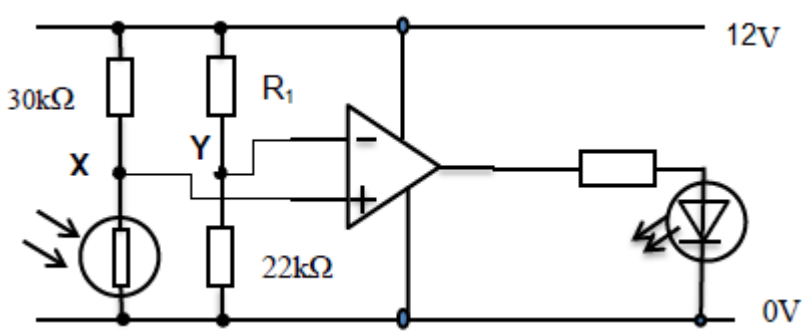

1 mark for connections correct way round

1

(c) (i) 60 kΩ / (60kΩ + 30kΩ)) × 12V = 8V

Working − 1

Answer − 1

2

(ii) R_1 = 11kΩ to give same value at Y as switching voltage at X (2:1 ratio) (No ecf on value)

Reason / calculation − 1

Answer − 1

2

(d) The op-amp is not ideal and will saturate above 0V

Saturation − 1

Need to drop voltage

Voltage drop − 1

Acceptable method

Method − 1

3

(Total 10 marks)

9 (a) range of frequencies in signal ✓
reference to frequency at which signal drops by
e.g. power 3dB (50%) / voltage 6dB (71%) ✓

2

(b) low pass / treble cut ✓

1

(c) (i) RC filter circuit, with input & output labelled ✓
correct R & C positions ✓

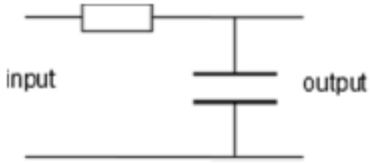

2

(ii) substitute values into f = 1 / 2πRC ✓

rearrange for C ✓

40 (39.7) nF ✓

3

(d) (i) gain > 1 ✓

1

(ii) 100Hz ✓

1

(iii) gain = 0.2 ✓ output = 0.4V ✓

2

[12]

10 (a) (i) Top: non-inverting input✓
Bottom: inverting input✓

2

(ii) when V+ > V–, output goes high ✓
when V+< V–, output goes low ✓

2

(b) (i) 5V across 30k + 10k + 10k = 50k (or similar calc) ✓
70k needed✓

2

(ii) calc leading to✓≥ 9V✓

2

(c) V_{-sat} output from op-amp is higher✓ than Vf for red LEDs✓
Vf for blue LEDs higher ✓ (Max 2)

2

[10]

11 (a) Feedback resistor from output to –ve input
Correct inverting or non-inverting amplifier circuit
For inverting, 4.7kΩ and 470kΩ in the correct place
For non-inverting, 4.7Ω input resistor AND two resistors in ratio of 99 / 100

4

(b) Formula
120mV
0.12V
(No unit error if obvious)

2

(c)

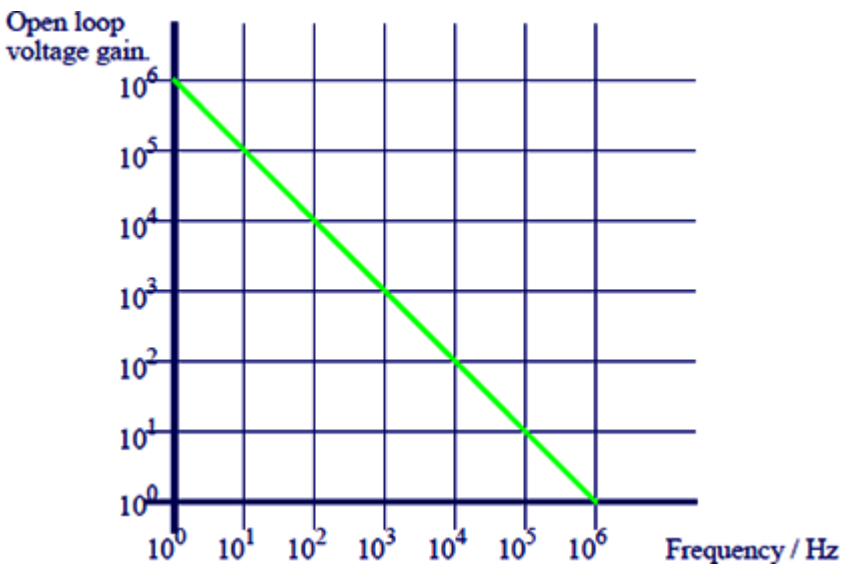

Positive gradient = no marks
Correct intercept on vertical axis
Correct intercept on horizontal axis
Straight line joining

3

(d) (No possible ecf from (c))
Calculation
10kHz

2

[11]

12 (a) Feedback resistor to inverting input
Series inverting input resistor
Series non-inverting input resistor
Resistor from non- inverting input to 0V – same value as R_f
All resistors in range 1kΩ to 1MΩ
Must have negative feedback then ratio of gain resistors = 100

6

(b) (i) 3V

1

(ii) 0V
No difference
The same

1

(c) e.g.
New resistor values of 198Ω and 202Ω (1% change)

Calculation of change in voltage $\frac{6 \times 198}{400} = 3.03\text{V}$ so change is 0.03V

New output voltage = 0.03 × 100 = 3V

3

[11]

13 (a) Low pass filter✓

1

(b)

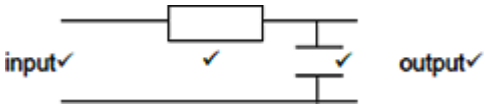

4

(c) use of 1 / 2RC✓ = 1 / 6.28 × 10^4 × 10^{-8} ✓= 1.6 kHz✓

3

(d) not suitable✓ cuts off frequencies from too low a frequency✓

2

[10]

14 (a) use of f = 1 / 2π√LC, change subject to L = 1 / $4\pi^2 f^2 C$
substitute values, calculation , leading to 6.9μH ✓✓✓✓

4

(b) use of λ = c / f, substitute values leading to 22.1m ✓
dipole = 11.05m ✓
too large for desk operation ✓

3

(c) 13.56 / 0.1 = 136✓ (could be rounded down to 135)

1

(d) 1KB = 8192 bits (allow 8000)✓
8192 / 100000 = 0.082s
(or allow values based on 8000, 0.08s) regardless of these variations, time to download centres on 80ms✓

2

[10]

15 (a) connected in non-inverting configuration ✓
pin 1 is used as input ✓

2

(b) (i) high pass / bass cut✓

1

(ii) use of $f_0 = 1 / 2\pi RC$✓
$1 / 2\times3.14159\times1\times10^{-6}\times22\times10^{3}$✓
7(.25) Hz✓

3

(c) reduce high frequency response / provide a load at hf / shunt high frequencies to 0V / stability / stop oscillation etc✓

1

(d) R_2✓, R4 (allow C_2) in feedback circuit ✓
(or ratio between✓ R_2 and R_4✓)

2

(e) Load / loudspeaker impedance (allow resistance) ✓
size of power supply voltage (allow heatsink considerations)✓

2

[11]

16 (a)

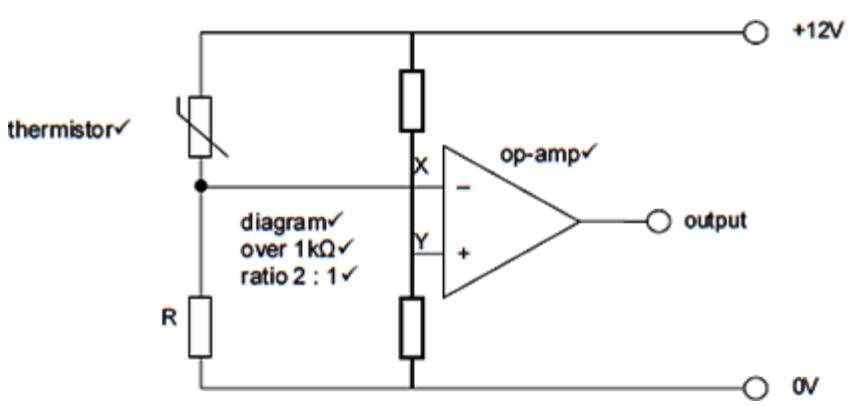

5

(b)

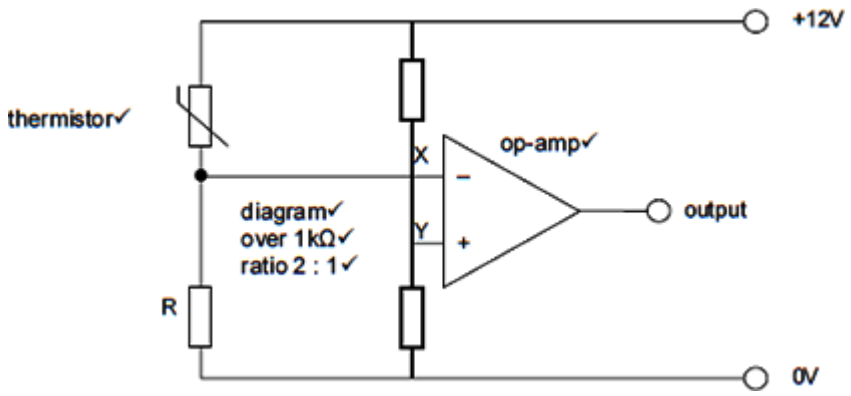

5

(c) thermistor 20kΩ at 20°C✓
2 : 1 ratio (or calc) ✓
R = 10kΩ✓

3

(d) (i) 0V✓

1

(ii) >0 – 3V✓

1

[15]

17 (a) (i) so it does not load the demodulator✓

1

(ii) non-inverting amplifier✓

1

(iii)

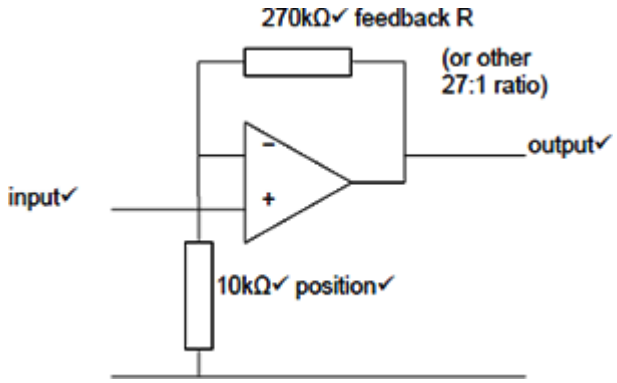

5

(iv) 10mV × +28 ✓ = 280mV✓

2

(b) $(1 \times 10^6) \div 28 = 35.7$kHz✓ ✓
suitable for audio sigs (max 20kHz) ✓

3

(c) push-pull source follower diagram✓
correct n channel symbol upper✓
correct p channel symbol lower✓
diode / resistor biasing ✓

4

[16]

18 (a)

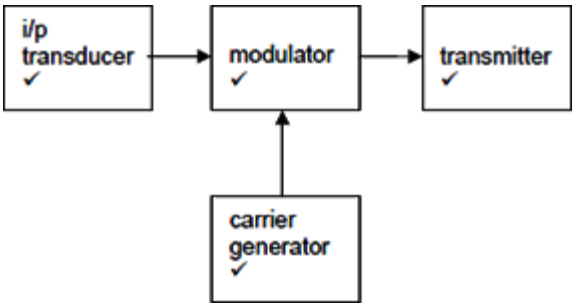

4

(b) (i) carrier generator✓

1

(ii) use of $f = 1 \div 2\pi\sqrt{LC}$✓

$1 \div 2\pi\sqrt{10^{-7} \times 5 \times 10^{-12}}$ ✓

225 MHz✓

3

(c) calc leading to λ = 1.32m✓
1.33 ÷ 2 = 0.66m✓

2

[10]

19 (a)

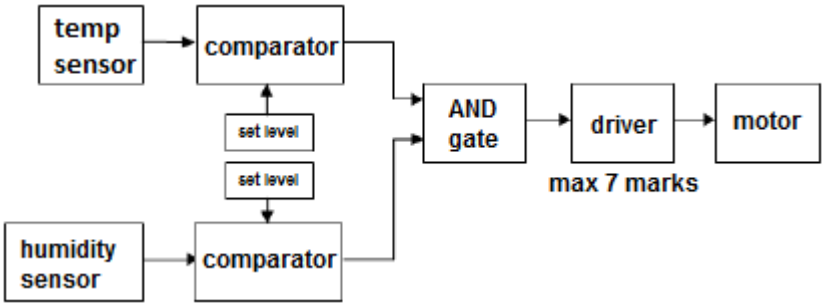

7

(b) (i) driver✓

1

(ii) comparator✓

1

(iii) temperature sensor✓

1

(c) (i) 25 + 450 = 475mA✓

1

(ii) 12V × 475mA✓
= 5.7W✓

2

[13]

20 (a) Formula, ✓
Substitution ✓
Gv=500 ✓

3

(b) Feedback resistor to output, ✓
Feedback resistor to – input, ✓
Resistor to + input, ✓
Resistor to 0V ✓

4

(c) Formula, ✓
substitution, ✓
1.1MΩ ✓

3

(d) (i) 2.2kΩ ✓

1

(ii) Voltage follower - Input to +, ✓
– to output ✓

2

[13]

21 (a) (i) use of $f_o = 1 / 2\pi\sqrt{LC}$, $L = 1 / 4\pi^2 f^2 C$✓
$L = 1 / 4 \times 9.87 \times 183.87 \times 10^{12} \times 150 \times 10^{-12} = 918nH$✓

2

(ii)

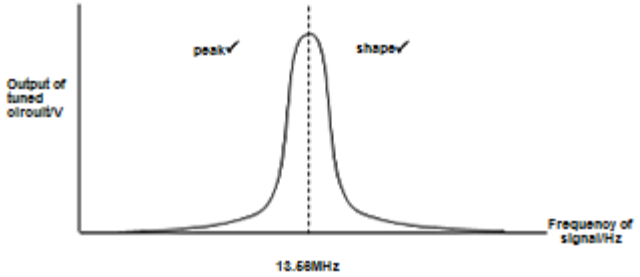

2

(iii) Selectivity, the ability to respond only to a narrow range of frequencies (channel) ✓
Quality factor, sharpness of curve, or calc f / 2Δf✓

2

(b) Communication on one channel✓
one way communication✓

2

(c) Transmission is 106 × 1024 bits s^{-1}, 1024 × 10 bits transmitted for 1K data✓
10240 / 106 × 1024 = 94ms✓

2

[10]

22

(a) $V_+ \left(= 12 \times \frac{6}{9}\right)$ = 8 V **(1)**

1

(b) at 0 °C, R_{th} = 100 (Ω) **(1)**
R_1 = (2 × R_{th}) = 200 Ω **(1)**

2

(c) (i) $R_2 = \left(\frac{12 - 2}{20 \times 10^{-3}}\right)$ **(1)**

= 500 Ω **(1)**

(ii) (use of $P = I^2 R$ gives) $P = (20 \times 10^{-3})^2 \times 500$ **(1)**
= 0.20 W **(1)**
(allow C.E. for value of R_2 from (i))

4

(d) 510 Ω
(allow C.E. for value of R_2 from (c)(i))

1

[8]

23

(a) (i) (use of $X_C = \frac{1}{2\pi f C}$ gives)

$f = \left(\frac{1}{2\pi X_C C}\right) = \frac{1}{2\pi 1000 \times (0.01 \times 10^{-6})}$ = 16 × 10^4Hz **(1)**

(ii) $\left(X_C = \frac{1}{2\pi f C}\right)$ low f gives high X_C **(1)**

X_C >> resistance 1.0 kΩ **(1)**
V_{out} (= IR) or $\frac{V_{out}}{V_{in}}$ is low **(1)**
(or correct usage of potentiometer equation)

4

(b) (shown in (i) that at low f, $\frac{V_{out}}{V_{in}}$ is low)

as f increases, X_C decreases and V_{out} (across R) increases **(1)**

until ≈ 0 V across X_C and $V_{out} = V_{in}$ **(1)**

2

[6]

24

(a) voltage at A = $\frac{12 \times 8}{18}$ **(1)** = 5.3 V

voltage at B = $\frac{12 \times 14}{18}$ = 9.3 V **(1)**

(3)

(b) (i) for op-amp. 1, $V_+ > V_-$ **(1)**

∴output (saturated) at +12 V, ∴ P is lit **(1)**

(ii) for op-amp. 2, $V_- > V_+$ **(1)**

∴ output (saturated) at –12 V, ∴Q is unlit **(1)**

(4)

(c) for P, $V = IR$ gives 12 – 1.6 = 20 × 10^{-3} × R **(1)**

R = 520 Ω **(1)**

(2)

[9]

25

(a) output of op-amp A is +12 V and output of op-amp B is 0 V **(1)**

(1)

(b) $V_X = 12 \times \frac{12}{24} = 6$ **(1)**

$V_Y = 12 \times \frac{8}{24} = 4$ V **(1)**

(2)

(c) P is < 6 V when R_{ldr} < 2 kΩ **(1)**

i.e. illumination > 50 lux **(1)**

P is < 4 V when R_{ldr} < 1 kΩ **(1)**

i.e. illumination > 100 1ux **(1)**

(4)

(d) when P < 6 V, V_- < V_+ for A **(1)**
output + **(1)**
for op amp B, V_- > V_+, output –, i.e. current **(1)**
when P becomes < 4 V, output of A is + **(1)**
i.e. current stops **(1)**

(max 4)

[11]

26 (a) Choice of 20kΩ✓
pot div calculation✓
8V✓

3

(b) upper half the value of lower✓
in range 1kΩ to 10kΩ✓
preferred values 1kΩ and 2kΩ, or 1.8kΩ and 3.6kΩ etc✓

3

(c) (i) +12V or high✓

1

(ii) 0V or low✓

1

[8]